WAND

DEPANELING SYSTEMS

DBA LARSEN MANUFACTURING

Product That Exceeds

Customer Expectations

WAND DEPANELING SYSTEMS

- WAND Depaneling Systems, a division of Larsen Manufacturing, designs and builds Depaneling Equipment for Printed Circuit Boards, and has a wide range of applications.
- The Wand System sets the standard for the quick and clean removal of populated assemblies out of a single form carrier panel. Multi-product design, coupled with 12 sec/cycle time, makes the WAND System a Global Leader in the depaneling process.

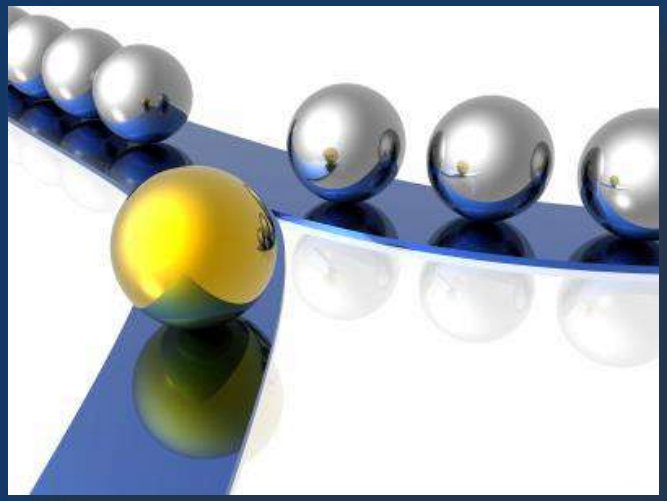

WAND
DEPANELING SYSTEMS
DBA LARSEN MANUFACTURING

WAND 分板切割系統

WAND 分板切割系統，為 Larsen Manufacturing 的子公司， 具備自行研發與製作各種電子板分板切割 (V cut) 的設備的能力。

WAND 建立了電子板快速切割與每作業循環後高效準清除配件的行業標準。多元化的產品設計，加上12秒的作業循環時間，使 WAND 分板切割系統成為全球業內的領導者。

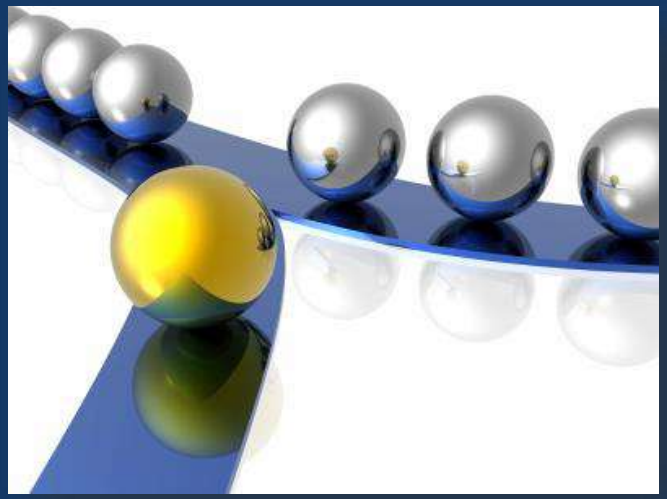

WAND
DEPANELING SYSTEMS
DBA LARSEN MANUFACTURING

WAND DEPANELING SYSTEM

MACHINE VIEW 產品圖像

CLOSE UP MACHINE WITH TOOL
配備模具產品圖像

WAND
DEPANELING SYSTEMS
DBA LARSEN MANUFACTURING

WAND 分板切割系統

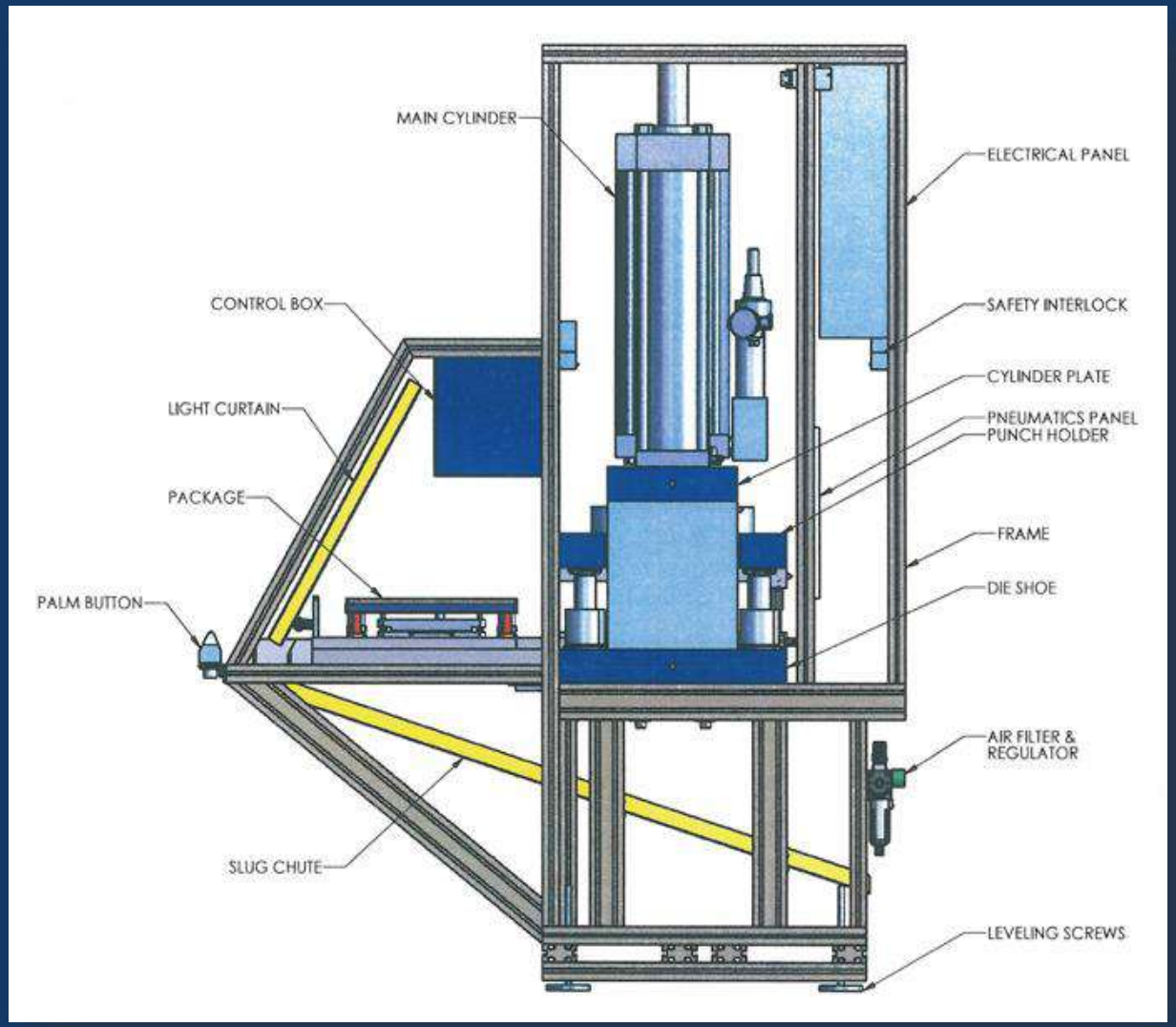

WAND
DEPANELING SYSTEMS
DBA LARSEN MANUFACTURING

EXAMPLES

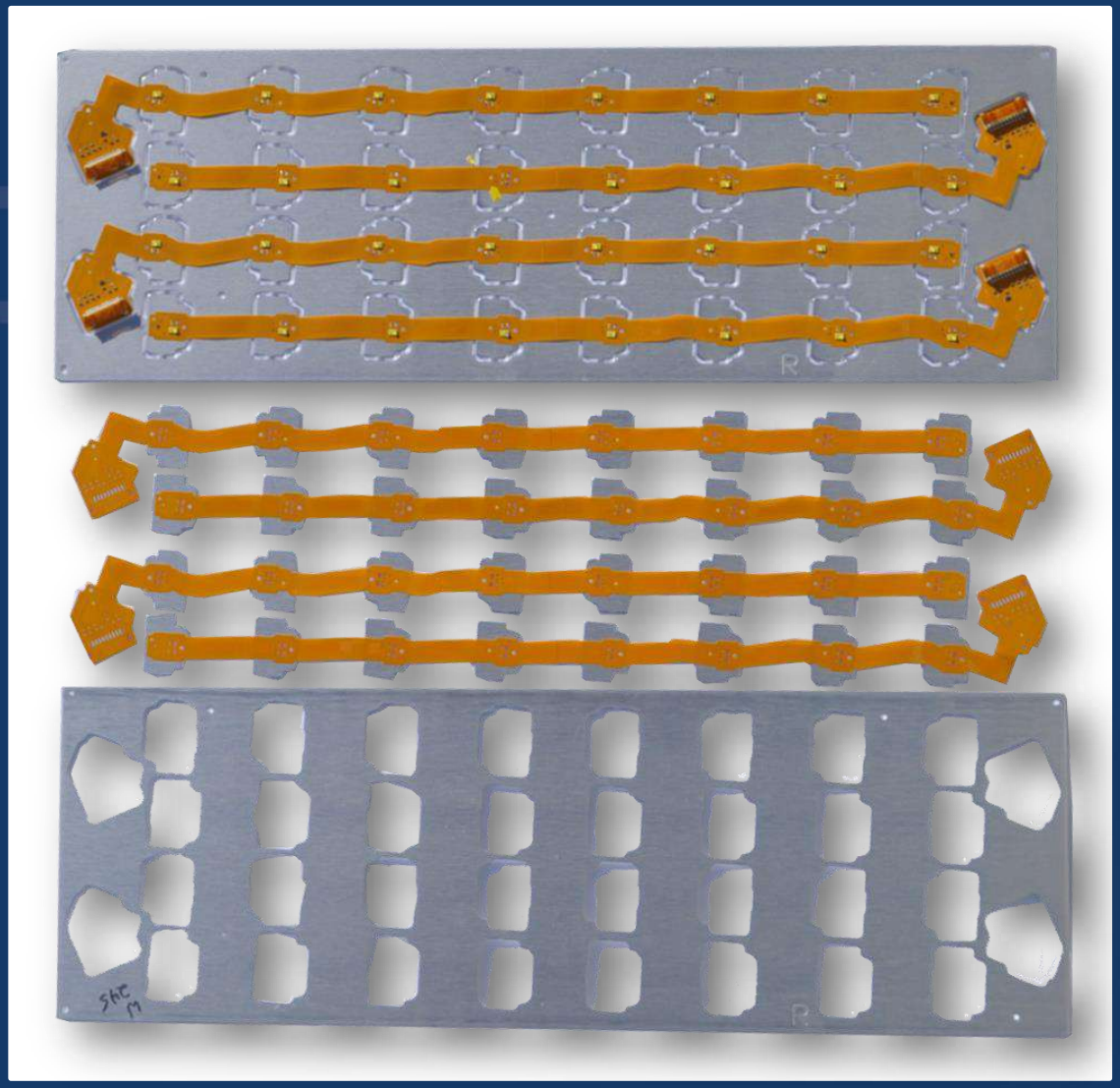

WAND
DEPANELING SYSTEMS
DBA LARSEN MANUFACTURING

製品圖像

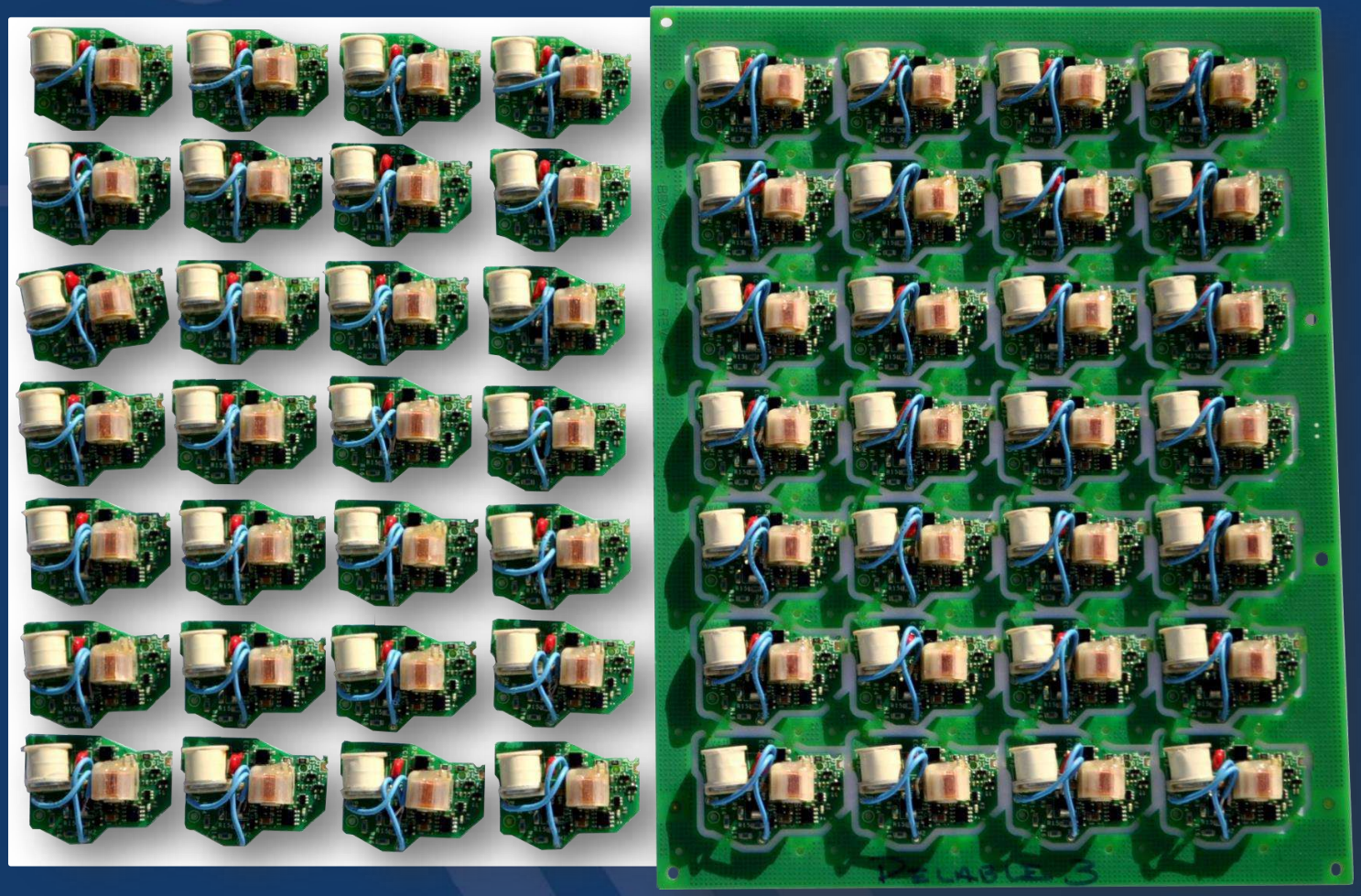

WAND
DEPANELING SYSTEMS
DBA LARSEN MANUFACTURING

EXAMPLES – 製品圖像

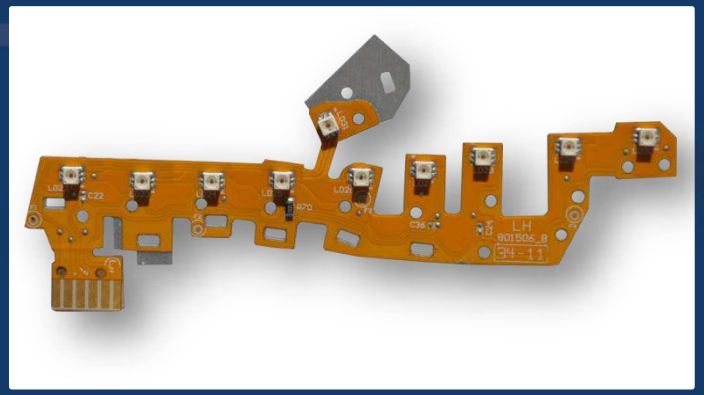

WAND
DEPANELING SYSTEMS
DBA LARSEN MANUFACTURING

8 Ton

SINGULATION SYSTEMS

Cylinder: 8 Ton
Die Package Size: 14” X 14”
Actual Work Area: 12” X 12”

FEATURES:

- 8 Ton Air/Oil Power Pack
- Quick Change Clamping
- Die Package - Storage Elevator (Optional)
- Air Logic Control
- 12 second cycle time
- 12” x 12” Maximum Pierce area
- Fully Enclosed Structural Tubing Frame
- 1 1/2” Maximum Component Height including board thickness (Accommodation of longer components available)FEATURES:

SAFETY:

- Optical Touch Controls
- Completely Guarded Cutting area
- Two Anti-Repeat / Anti-Tie Down Finger Controlled Start Mechanisms
- Built In Safety Light Curtains
- Package position sensors prevent power pack from cycling if package is out of position.
- (4) Pneumatic Clamps Lock upper Package in Position

GENERAL SPECIFICATIONS:

Foot Print:	28” W x 42” D x 66” H
Weight:	1800 LBS.
Air Pressure:	80 PSI (3 CFM)
Working Height:	38 1/2”
Warranty:	12 months / Parts & Labor

WAND
DEPANELING SYSTEMS
DBA LARSEN MANUFACTURING

8 噸級設備

產品特點：

- 8 噸氣壓 / 油壓驅動
- 快速更換定位
- 模具封裝 / 升降系統 (可選擇)
- 氣動控制
- 12 秒循環作業時間
- 305 x 305 mm 切割面積
- 完備的管式框架
- 包括電子板本身厚度, 可容納最高3.8cm的配件 (可根據需要, 容納更長的配件)

氣缸: 8噸
可置模具最大面積: 355 x 355mm
實際工作面積: 305 x 305mm

安全性:

- 電子螢幕操控
- 全保護式切割空間
- 安全雙手按制
- 安全光幕
- 精密感應裝置, 以防止模具走位時啓動
- 4 個氣動夾架, 固定上模位置

產品規格:

外圍尺寸:	710 x 1060 x 1670mm
重量:	1800磅
氣壓:	80 PSI (3 CFM)
作業高度:	97.8 cm
售後保障:	1年 / 零件與維修

WAND
DEPANELING SYSTEMS
DBA LARSEN MANUFACTURING

15 Ton

SINGULATION SYSTEMS

FEATURES:

- 15 Ton Air/Oil Power Pack
- Quick Change Clamping
- Die Package - Storage Elevator (Optional)
- PLC Controlled / Air Logic Control
- 12 second cycle time
- 16” x 16” Maximum Pierce area
- Fully Enclosed Structural Tubing Frame
- 1 1/2” Maximum Component Height including board thickness (Accommodation of longer components available)

Cylinder: 15 Ton
Die Package Size: 16” X 16”
Actual Work Area: 14” X 14”

SAFETY:

- Optical Touch Controls
- Completely Guarded Cutting area
- Two Anti-Repeat / Anti-Tie Down Finger Controlled Start Mechanisms
- Built In Safety Light Curtains
- Package position sensors prevent power pack from cycling if package is out of position.
- (4) Pneumatic Clamps Lock upper Package in Position

GENERAL SPECIFICATIONS:

Foot Print:	36” W x 52” D x 66” H
Weight:	2800 LBS.
Air Pressure:	80 PSI (6 CFM)
Working Height:	38 1/2”
Warranty:	12 months / Parts & Labor

WAND
DEPANELING SYSTEMS
DBA LARSEN MANUFACTURING

15 噸級設備

產品特點：

- 15 噸氣壓 / 油壓驅動
- 快速更換定位
- 模具封裝 / 升降系統 (可選擇)
- PLC 電動控制 / 氣動控制
- 12 秒循環作業時間
- 355 x 355mm 切割面積
- 完備的管式框架
- 包括電子板本身厚度, 可容納最高3.8cm的配件 (可根據需要, 容納更長的配件)

氣缸: 15噸
可置模具最大面積: 406 x 406mm
實際工作面積: 355 x 355mm

安全性:

- 電子螢幕操控
- 全保護式切割空間
- 安全雙手按制
- 精密感應裝置, 以防止模具走位時啓動
- 4 個氣動夾架, 固定上模位置
- 安全光幕
- 聯鎖裝置, 以防止安全裝置被移走時啓動

產品規格:

外圍尺寸:	914 x 1320 x 1670mm
重量:	2800磅
氣壓:	80 PSI (6 CFM)
作業高度:	97.8 cm
售後保障:	1年 / 零件與維修

WAND
DEPANELING SYSTEMS
DBA LARSEN MANUFACTURING

30 Ton

SINGULATION SYSTEMS

FEATURES:

- 30 Ton Air/Oil Power Pack
- Quick Change Clamping
- Die Package - Storage Elevator (Optional)
- PLC Controlled / Air Logic Control
- 12 second cycle time
- 18” x 18” Maximum Pierce area
- Fully Enclosed Structural Tubing Frame
- 1 1/2” Maximum Component Height including board thickness (Accommodation of longer components available)

Cylinder: 30 Ton
Die Package Size: 18” X 18”
Actual Work Area: 16” X 16”

SAFETY:

- Optical Touch Controls
- Completely Guarded Cutting area
- Two Anti-Repeat / Anti-Tie Down Finger Controlled Start Mechanisms
- Built In Safety Light Curtains
- Package position sensors prevent power pack from cycling if package is out of position.
- (4) Pneumatic Clamps Lock upper Package in Position

GENERAL SPECIFICATIONS:

Foot Print:	36” W x 52” D x 66” H
Weight:	2800 LBS.
Air Pressure:	80 PSI (11 CFM)
Working Height:	38 1/2”
Warranty:	12 months / Parts & Labor

WAND
DEPANELING SYSTEMS
DBA LARSEN MANUFACTURING

30 噸級設備

氣缸: 30噸
可置模具最大面積: 457 x 457mm
實際工作面積: 406 x 406mm

產品特點：

- 30 噸氣壓 / 油壓驅動
- 快速更換定位
- 模具封裝 / 升降系統 (可選擇)
- PLC 電動控制 / 氣動控制
- 12 秒循環作業時間
- 406 x 406mm 切割面積
- 完備的管式框架
- 包括電子板本身厚度, 可容納最高3.8cm的配件 (可根據需要, 容納更長的配件)

安全性:

- 電子螢幕操控
- 全保護式切割空間
- 安全雙手按制
- 精密感應裝置, 以防止模具走位時啓動
- 4 個氣動夾架, 固定上模位置
- 安全光幕
- 聯鎖裝置, 以防止安全裝置被移走時啓動

產品規格:

外圍尺寸:	914 x 1320 x 1670mm
重量:	2800磅
氣壓:	80 PSI (11 CFM)
作業高度:	97.8 cm
售後保障:	1年 / 零件與維修

WAND
DEPANELING SYSTEMS
DBA LARSEN MANUFACTURING

WAND

DEPANELING SYSTEMS

DBA LARSEN MANUFACTURING

1008, 10/F New City Centre, 2 Lei Yue Mun Road, Kwun Tong, Kowloon, Hong Kong

香港九龍觀塘鯉魚門道2號 新城工商中心 10 樓 1008 室

Tel: (852) 2772 -0772 Fex: (852) 2772 - 0771 Company web page: www.larsenmfg.com